THE CITYSCAPE CHAIR

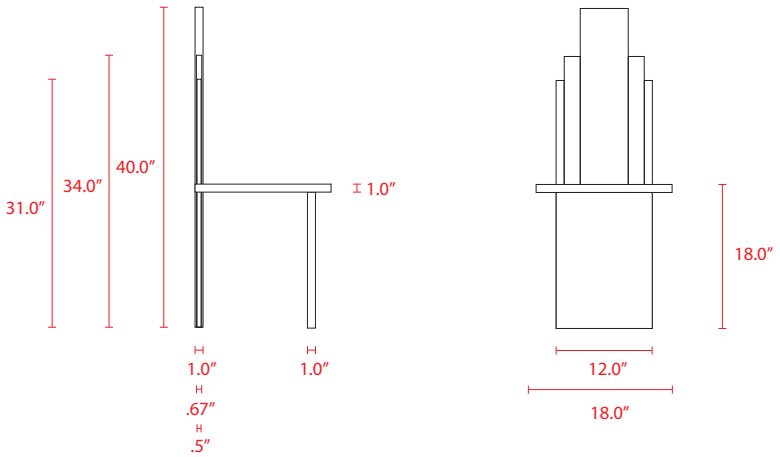

HONEY TINTED
WHITE OAK

DARK BRONZE
WIRE BRUSH FINISH

Bryan Johnson DESIGN